PRODUCT NUMBER

55003-X 01 ZZZ LF

- "LEAD FREE" (OPTIONAL)
- SPECIAL LOAD PATTERN SEE SHEET 4
- SIZE (1 MOD)
- PLATING PERFORMANCE LEVEL, SEE SHEET 2
- BASE NUMBER

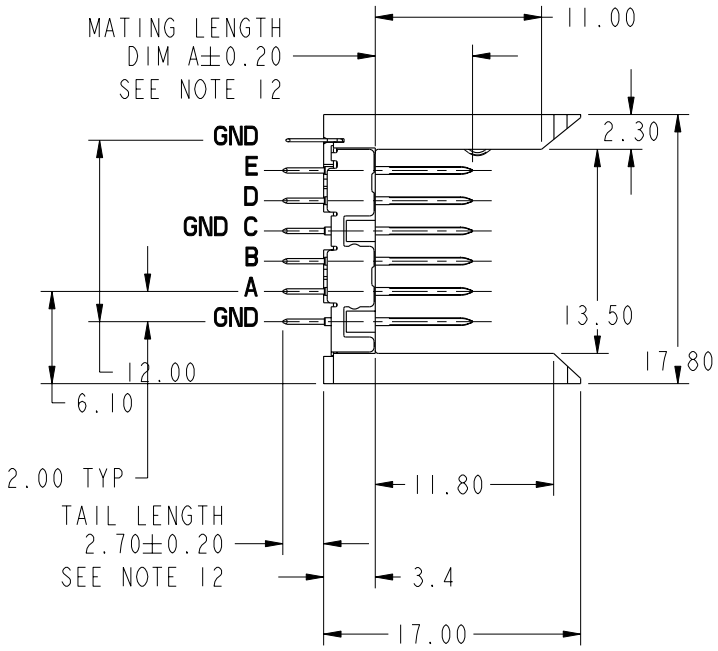

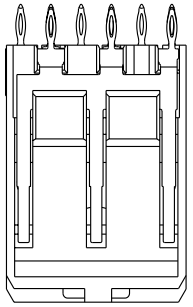

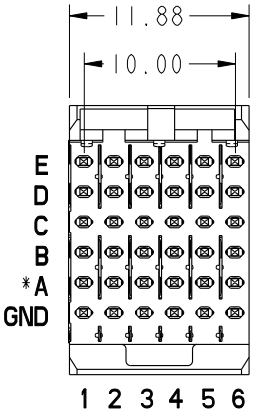

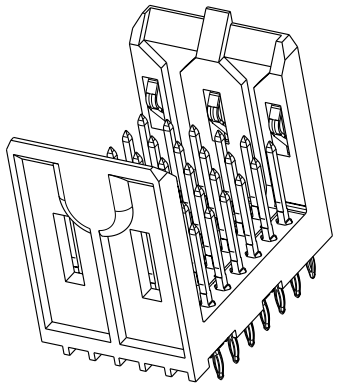

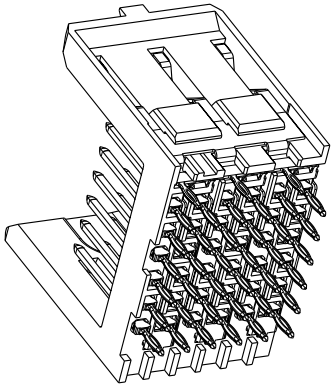

*ROW C INFORMATION

ODD NUMBER COLUMNS WITHIN ROW C ARE COMMONED TO GROUND INTERNALLY WITHIN THE HOUSING. THE EVEN NUMBER COLUMNS WITHIN ROW C ARE NOT. FOR MAXIMUM PERFORMANCE IT IS RECOMMENDED THESE EVEN COLUMNS BE GROUND COMMONED WITHIN PCB.

SEE NOTE 11

mat'l code SEE NOTE 3				tolerances unless otherwise specified			CUSTOMER COPY	FCI www.fciconnect.com
ltr	ecn no.	dr	date		0.X ±0.3		projection	title VERTICAL SIGNAL HDR 5 ROW P.F. 30 POS. SPECIAL LOAD STD.
H	V06-0492	DCH	2006-05-23	linear	0.XX ±0.13			
J	V07-0164	DCH	2007-03-02		.XXX ±.051			
K	V07-0686	HTB	2007-11-19	angles	0° ±2°			
L	V08-0039	HTB	2008-01-25	dr	E. KROPER.	2001-01-12	MM	product family METRAL 4000 / code 213
-	-	-	-	engr	J. VOLSTROF	2001-01-12		size A / dwg no 55003 / sheet 1 of 4
F	V05-0771	VS	2005-09-04	chr	J. VOLSTORF	2001-01-12	scale 1:1	
G	V06-0146	DAI	2006-02-21	appd	J. VOLSTROF	2001-01-12		

sheet index	revision	L	L	L	L
	sheet	1	2	3	4

cage code 22526

This document is the property of and embodies CONFIDENTIAL and PROPRIETARY information of FCI. No part of the information shown on this document may be used in any way or disclosed to others without the written consent of FCI. Copyright FCI.

REV E - 2006-04-18

Pro/E

PDM: Rev:L STATUS: Released Printed: Aug 17, 2008

PRODUCT NUMBER	PLATING PERFORMANCE LEVEL
55003-101ZZZ	TELCORDIA CO
55003-101ZZZLF	TELCORDIA CO
55003-501ZZZ	TELCORDIA UE
55003-501ZZZLF	TELCORDIA UE
55003-901ZZZ	TELCORDIA CO
55003-901ZZZLF	TELCORDIA CO

NOTES:

1. SEE APPLICATION SPECIFICATION GS-20-014 FOR INFORMATION ON AVAILABLE TOOLING, CIRCUIT BOARD DESIGN CONSIDERATIONS, REPAIR PROCEDURES AND PRODUCT OFFERINGS. SEE PRODUCT SPECIFICATION GS-12-184.

2. UNLESS OTHERWISE SPECIFIED, ALL DIMENSIONS AND TOLERANCES ARE IN ACCORDANCE WITH ASME Y14.5, 1994

3. HOUSING MATERIAL: LIQUID CRYSTAL POLYMER, 30% GLASS FILLED, FLAME RETARDANT PER UL 94-V0.
PIN MATERIAL: PHOSPHOR BRONZE
GROUND SPRING MATERIAL: PHOSPHOR BRONZE
STRIPLINE SHIELD MATERIAL: PHOSPHOR BRONZE

4. DIMENSIONAL RESTRICTIONS OF PINS IN HEADERS.
FOR USE WITH METRAL 4000 RECEPTACLES.
DIM A : 5.00mm MIN, 6.50mm MAX FOR ROWS A,B,D,E
DIM A : 5.00mm MIN, 8.00mm MAX FOR ROWS C
DIM A : 5.00mm MIN, 5.75mm MAX FOR ROWS GND
FOR USE WITH METRAL 1000 RECEPTACLES
DIM A : 5.00mm MIN, 8.00mm MAX FOR ROWS A,B,C,D,E
DIM A : 5.00mm MIN, 5.75mm MAX FOR ROW GND

5. THE MIN PCB THICKNESS FOR FRONT PLUG-UP APPLICATIONS IS 1.6mm.

6. THE 'CONNECTOR OUTLINE' IS THE MIN OUTLINE REQUIRED. TO DETERMINE THE OUTLINE NECESSARY TO PERMIT THE VARIOUS TYPES OF REPAIR OPERATIONS, SEE APPLICATION SPECIFICATION GS-20-010.

7. CURRENT RATING : 1 AMP PER PIN

8. TEMPERATURE RANGE : -55°C TO +105°C

9. P/N 55003-X01ZZZ SHOWN.

10. AVOID TRACES ON TOP OF BOARD DUE TO EXPOSED GROUND SHIELD.

11. FOR FRONT PLUG-UP APPLICATIONS, THE EVEN NUMBERED PINS IN ROW "C" CAN BE USED FOR POWER AS WELL AS FOR GROUND. IF THE SURROUNDING PINS ARE NOT USED FOR POWER, THEN EACH PIN CAN CARRY 3 AMPS. IF THE SURROUNDING PINS ARE USED FOR POWER, THEN EACH PIN CAN CARRY 1 AMP. WHEN THE SURROUNDING PINS ARE USED ONLY FOR LOW SPEED SIGNALS, THEN THE EVEN NUMBERED "C" ROW PINS CAN ALSO BE USED FOR LOW SPEED SIGNALS.

12. AFTER INSERTION INTO, CIRCUIT BOARD WITH QUALIFIED TOOL.

13. PRODUCTS WHERE THE PART NUMBER ENDS IN 'LF' MEET EUROPEAN UNION DIRECTIVES AND OTHER COUNTRY REGULATIONS AS DESCRIBED IN GS-22-008.
ALL PRODUCTS WILL WITHSTAND EXPOSURE TO 260°C FOR 60 SECONDS IN A CONVECTION, INFRA-RED OR VAPOR PHASE REFLOW OVEN.

14. FOR LEAD FREE PART NUMBERS, ADD AN 'LF' SUFFIX.
EXAMPLE: 55003-X01002LF.

15. PLATING INFORMATION: PLATING ON CONTACT AREA MEETS THE PERFORMANCE LEVELS SHOWN IN TABLE ON THIS SHEET.
PLATING ON "LF" TAILS IN Sn. PLATING ON ALL OTHER TAILS IS SnPb.
EQUIVALENT PRECIOUS METAL PLATING MAY BE SUBSTITUTED.

This document is the property of and embodies CONFIDENTIAL and PROPRIETARY information of FCI. No part of the information shown on this document may be used in any way or disclosed to others without the written consent of FCI. Copyright FCI.

mat'l code SEE NOTE 3				tolerances unless otherwise specified			CUSTOMER COPY
ltr	ecn no.	dr	date	linear	0.X ±0.3		
L					0.XX ±0.13		projection
					.XXX ±.051		
				angles	0° ±2°		
				dr	E. KROPER.	2001-01-12	MM
				engr	J. VOLSTROF	2001-01-12	
				chr	J. VOLSTORF	2001-01-12	scale 1:1
				appd	J. VOLSTROF	2001-01-12	
sheet index	revision sheet						

www.fciconnect.com

title: VERTICAL SIGNAL HDR 5 ROW P.F. 30 POS. SPECIAL LOAD STD.

product family: METRAL 4000 | code: 213

size: A | dwg no: 55003 | sheet: 2

cage code: 22526

REV E - 2006-04-18

Pro/E

PDM: Rev:L STATUS:Released Printed: Aug 17, 2008

PRODUCT NUMBER
SEE SHEETS 1, 2, 4

PRESS-FIT HOLES	OPTION 1 SnPb PLATING	OPTION 2 COPPER	OPTION 3 IMMERSION Ag
FINISHED HOLE DIAMETER	0.45-0.55	0.48-0.57	0.48-0.57
DRILLED HOLE SIZE	0.60±0.02	0.60±0.02	0.60±0.02
COPPER PLATING THICKNESS	0.025 MIN-0.050 MAX.	0.025 MIN-0.050 MAX.	0.025 MIN-0.050 MAX.
HOLE PLATING	0.005-0.015 SnPb	NONE	.0002 - .0006 Ag

RECOMMENDED PCB HOLE PATTERN
(COMPONENT SIDE) SEE NOTE 10

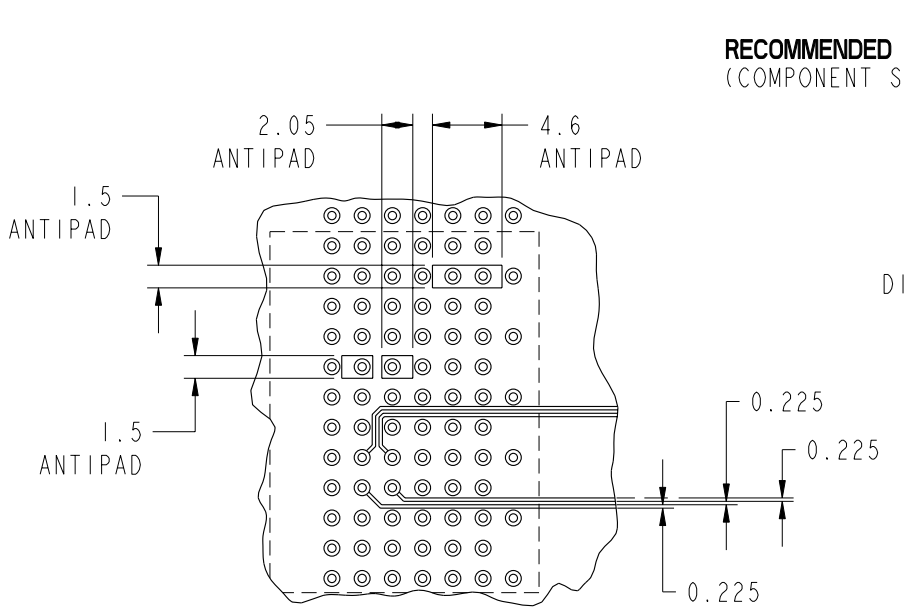

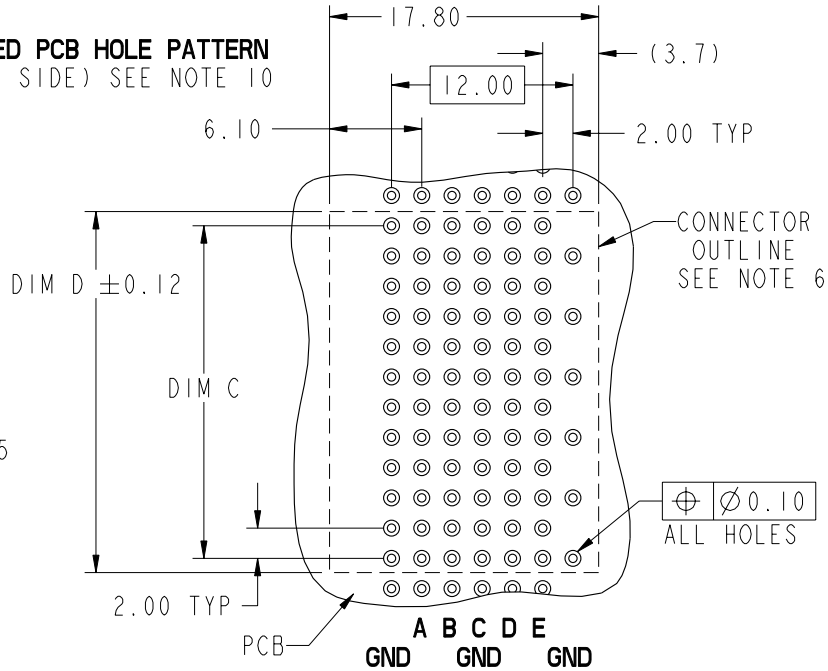

RECOMMENDED TRACK AND ANTIPAD DIMENSIONS
SCALE 2:1

mat'l code SEE NOTE 3				tolerances unless otherwise specified			CUSTOMER	FCI www.fciconnect.com
ltr	ecn no.	dr	date	linear	0.X ±0.3		COPY	
L					0.XX ±0.13		projection	title VERTICAL SIGNAL HDR 5 ROW P.F. 30 POS. SPECIAL LOAD STD.
					.XXX ±.051			
				angles	0° ±2°			
				dr	E. KROPER.	2001-01-12	MM	product family METRAL 4000 code 213
				engr	J. VOLSTROF	2001-01-12		
				chr	J. VOLSTORF	2001-01-12	scale 1:1	size A dwg no 55003 sheet 3
				appd	J. VOLSTROF	2001-01-12		
sheet index	revision sheet							cage code 22526

This document is the property of and embodies CONFIDENTIAL and PROPRIETARY information of FCI. No part of the information shown on this document may be used in any way or disclosed to others without the written consent of FCI. Copyright FCI.

REV E - 2006-04-18

Pro/E

PDM: Rev:L STATUS:Released Printed: Aug 17, 2008

SPECIAL LOAD PATTERNS

PRODUCT #	ROW	PIN CODES
55003-X01002 SEE NOTE 14 LEAD FREE OPTION	E	03
	D	
	C	
	B	
	A	
	GND	02

PRODUCT #	ROW	PIN CODES
55003-X01003 SEE NOTE 14 LEAD FREE OPTION	E	02
	D	
	C	
	B	
	A	
	GND	

PRODUCT #	ROW	PIN CODES
55003-X01004 SEE NOTE 14 LEAD FREE OPTION	E	02
	D	
	C	
	B	
	A	
	GND	NONE

PRODUCT #	ROW	PIN CODES
55003-X01005 SEE NOTE 14 LEAD FREE OPTION	E	01
	D	
	C	
	B	
	A	
	GND	

DIM A	PIN CODES
5.00	01
5.75	02
6.50	03
7.25	04
8.00	*19

* CURRENTLY NOT AVALABLE

This document is the property of and embodies CONFIDENTIAL and PROPRIETARY information of FCI. No part of the information shown on this document may be used in any way or disclosed to others without the written consent of FCI. Copyright FCI.

mat'l code SEE NOTE 3	tolerances unless otherwise specified	CUSTOMER COPY	FCI www.fciconnect.com
ltr: L	linear: 0.X ±0.3; 0.XX ±0.13; .XXX ±.051	projection	title VERTICAL SIGNAL HDR 5 ROW P.F. 30 POS. SPECIAL LOAD STD.
	angles: 0° ±2°	MM	product family METRAL 4000; code 213
	dr: E. KROPER. 2001-01-12		size A; dwg no 55003; sheet 4
	engr: J. VOLSTROF 2001-01-12		
	chr: J. VOLSTORF 2001-01-12	scale 1:1	
	appd: J. VOLSTROF 2001-01-12		
sheet index	revision sheet		cage code 22526

Pro/E

REV E - 2006-04-18

PDM: Rev:L STATUS:Released Printed: Aug 17, 2008