2.00mm (.079") Pitch Mi II™ System Wire-to-Board Header

53313
Dual Row Vertical

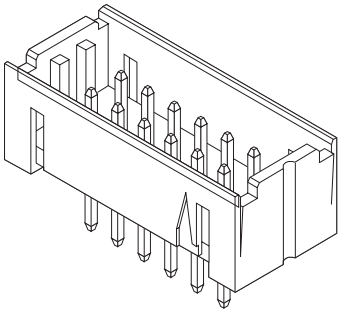

Features and Benefits
- Sizes 6 to 60 circuits
- Polarization peg provides correct PCB placement

Reference Information
Packaging: Tray
UL File No.: E29179
CSA File No.: LR19980
Mates With: 51089, 52478 and 52484 (with 51094 clip)
Accepts: 51094 clip with two 52484 IDT receptacles
Designed In: Millimeters

Electrical
Voltage: 125V
Current:

AWG	24	26	28	30
	2.0A	1.5A	1.0A	0.5A

Contact Resistance: 20 milliohms max.
Dielectric Withstanding Voltage: 500V
Insulation Resistance: 1000 Megohms min.

Physical
Housing: Gray glass-filled PBT, UL 94V-0
Contact: Brass
Plating: Tin
Operating Temperature: -40 to +105˚C

Circuits	Order No.	Lead-free
6	53313-0665	Yes
8	53313-0865	
10	53313-1065	
12	53313-1265	
14	53313-1465	
16	53313-1665	
18	53313-1865	
20	53313-2065	
22	53313-2265	

Circuits	Order No.	Lead-free
24	53313-2465	Yes
26	53313-2665	
28	53313-2865	
30	53313-3065	
34	53313-3465	
40	53313-4065	
50	53313-5065	
60	53313-6065	

2.00mm (.079") Pitch Mi II™ System Wire-to-Board Header

53314
Dual Row, Vertical With Eject Levers

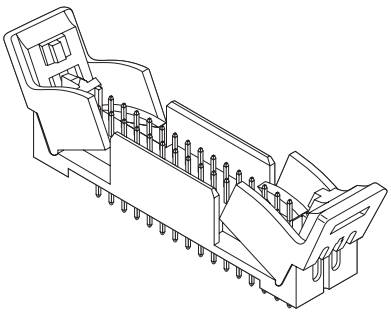

Features and Benefits
- Sizes 30 to 60 circuits
- Polarization peg provides correct PCB placement

Reference Information
Packaging: Tray
UL File No.: E29179
CSA File No.: LR19980
Mates With: 51089 and 52478
Designed In: Millimeters

Electrical
Voltage: 125V
Current:

AWG	24	26	28	30
	2.0A	1.5A	1.0A	0.5A

Contact Resistance: 20 milliohms max.
Dielectric Withstanding Voltage: 500V
Insulation Resistance: 1000 Megohms min.

Physical
Housing: Gray glass-filled PBT, UL 94V-0
Contact: Brass
Plating: Tin
Operating Temperature: -40 to +105˚C

Circuits	Order No.	Lead-free
30	53314-3065	Yes
34	53314-3465	
40	53314-4065	
50	53314-5065	
60	53314-6065	