ELECTRIC DOUBLE LAYER CAPACITORS "EVerCAP®"

nichicon

JC series

Snap-in Terminal Type

- Excellent in voltage holding property.
- Suitable for quick charge and discharge.
- Wild temperature range (– 25°C to + 60°C).
- Adapted to the RoHS directive (2002/95/EC).

■Specifications

Item	Performance Characteristics
Category Temperature Range	– 25 to +60°C
Rated Voltage Range	2.5V
Rated Capacitance Range	15 to 150F See Note
Capacitance Tolerance	±20% (20°C)
Leakage Current	0.5C (mA) [C : Rated Capacitance(F)] (After 30 minutes' application of rated voltage, 2.5V)
Stability at Low Temperature	Capacitance (– 25°C) / Capacitance (+20°C) ×100 ≧ 70%
ESR, DCR*	Refer to the list below (20°C). *DC internal resistance
Endurance	The specifications listed at right shall be met when the capacitors are restored to 20°C after the rated voltage is applied for 2000 hours at 60°C.
Shelf Life	The specifications listed at right shall be met when the capacitors are restored to 20°C after storing the capacitors under no load for 2000 hours at 60°C.
Marking	Printed with white color letter on black sleeve.

Capacitance change	Within ±30% of initial value
ESR	300% or less of initial specified value
Leakage current	Less than or equal to the initial specified value

■Drawing

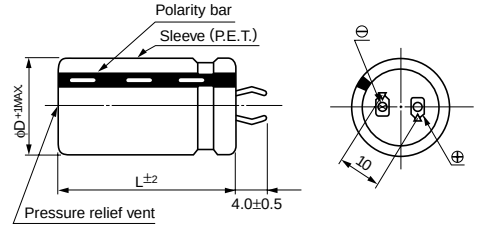

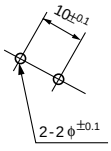

(PC board hole dimensions)

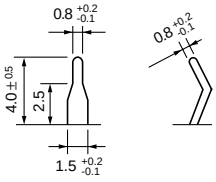

(Terminal dimensions)

Type numbering system (Example : 2.5V 150F)

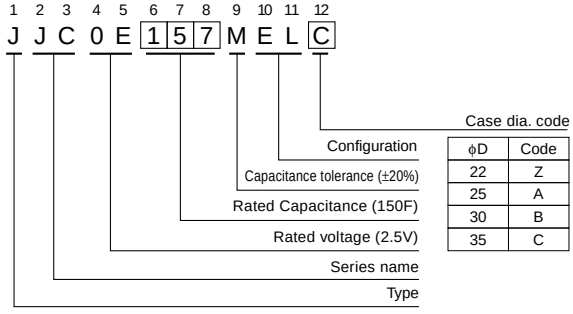

φD	Code
22	Z
25	A
30	B
35	C

■Dimensions

Rated Voltage (code)	Cap. (F)	Cap. code	ESR(mΩ) (at 1kHz)	DCR(mΩ)	Case size φD×L (mm)			
					φ22 (Z)	φ25 (A)	φ30 (B)	φ35 (C)
2.5V (0E)	15	156	120	500	22×20			
	18	186	120	400		25×20		
	22	226	90	300			30×20	
	27	276	90	250	22×30		30×20	
	33	336	80	200		25×30		35×20
	39	396	80	200	22×35	25×30		35×20
	47	476	70	160	22×40	25×35		
	56	566	70	140		25×40	30×30	
	68	686	60	110				35×30
	82	826	60	100		25×50	30×40	
	100	107	50	90				35×35
	120	127	50	70			30×50	35×40
	150	157	40	60				35×50

Note :
The capacitance calculated from discharge time (ΔT) with constant current (i) after 30minuite charge with rated voltage (2.5V).
The discharge current (i) is 0.01 × F (rated capacitance).
A discharge time (ΔT) measured between 2V and 1V with constant current.
The capacitance calculated bellow.

Capacitance (F) = i × ΔT