DESCRIPTION: DIP SOLDER FEMALE/STAMPED

SPECIFICATIONS:

MATERIALS:
- SHELL: STEEL, NICKEL PLATED
- INSULATOR: UL 94V-0 RATED BLACK NYLON 9T
- CONTACTS: BRASS, GOLD PLATED
- RoHS COMPLIANT

ELECTRICALS:
- CURRENT RATING: 5 AMPS
- CONTACT RESISTANCE: 15 mOHMS MAX
- INSULTOR RESISTANCE: 1000 MOHMS MIN
- VOLTAGE: 500V AC FOR 1 MINUTE
- TEMPERATURE: -50°C TO +100°C

POS.	A	B	C	D	E	F	G
09	1.213	0.984	0.642	0.756	0.311	0.109	0.496
	30.80	24.99	16.30	19.20	7.90	2.77	12.60
15	1.541	1.312	0.971	1.091	0.311	0.109	0.496
	39.14	33.32	24.65	27.70	7.90	2.77	12.60
25	2.087	1.852	1.512	1.618	0.311	0.109	0.496
	53.00	47.04	38.40	41.10	7.90	2.77	12.60
37	2.728	2.500	2.157	2.256	0.311	0.109	0.496
	69.29	63.50	54.80	57.30	7.90	2.77	12.60
50	2.638	2.406	2.055	2.169	0.429	0.109	0.602
	67.00	61.00	52.20	55.10	10.90	2.77	15.30

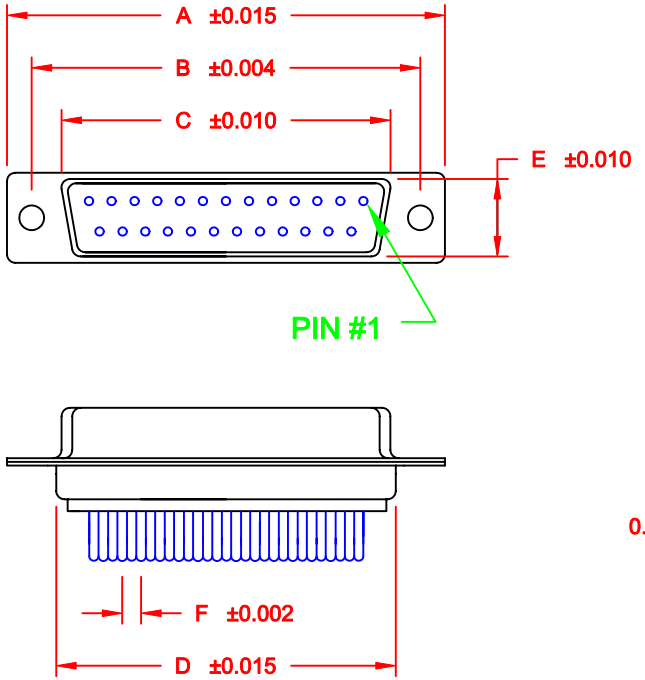

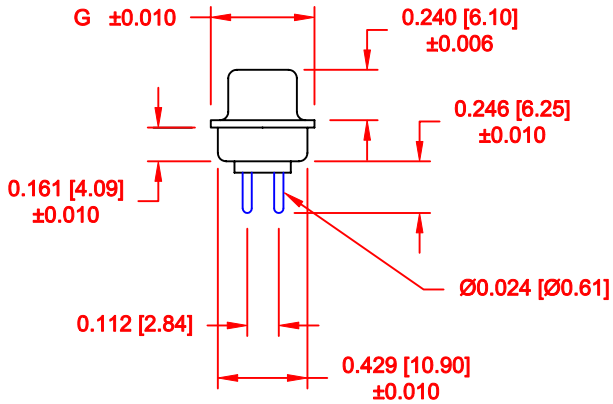

171-YYY-213RYY1

SERIES

POSITIONS
- 009
- 015
- 025
- 037
- 050

GENDER
- 1 = MALE
- 2 = FEMALE

TERMINATION
- 1 = DIP SOLDER

SHELL PLATING
- 3 = NICKEL

HARDWARE OPTIONS
- 00 = NO HARDWARE
- 01 = .098 4-40 CLINCH NUT BOARD SIDE
- 02 = .250 4-40 CLINCH NUT BOARD SIDE
- 03 = .250 4-40 CLINCH NUT MATING SIDE
- 05 = .255 4-40 BOARD LOCK
- 91 = .225 4-40 SPACER/BOARD LOCK

PLATING OPTIONS
- 1 = GOLD FLASH
- 2 = 30 MICRO-INCH GOLD

DO NOT SCALE FROM DRAWING

THESE DRAWINGS AND SPECIFICATIONS ARE THE PROPERTY OF NorComp AND SHALL NOT BE REPRODUCED, COPIED OR USED AS THE BASIS FOR THE MANUFACTURE OF SALE OF APPARATUS WITHOUT WRITTEN PERMISSION.

DRAWN: PAM JENKINS	DATE: 8-12-98
CHECKED:	DATE:
SCALE:	SHEET 1 OF 3 — REV 4
DWG NO. 171-YYY-213RYY1	

NorComp

RoHS COMPLIANT

DESCRIPTION: PCB LAYOUT - STANDARD "D" - MALE & FEMALE

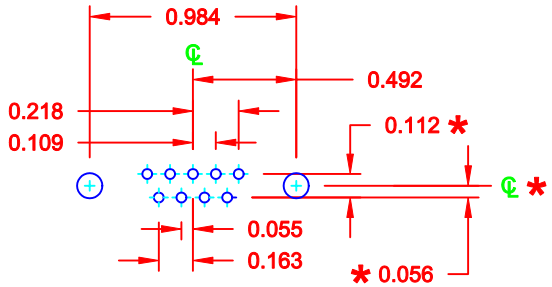

9 POSITION

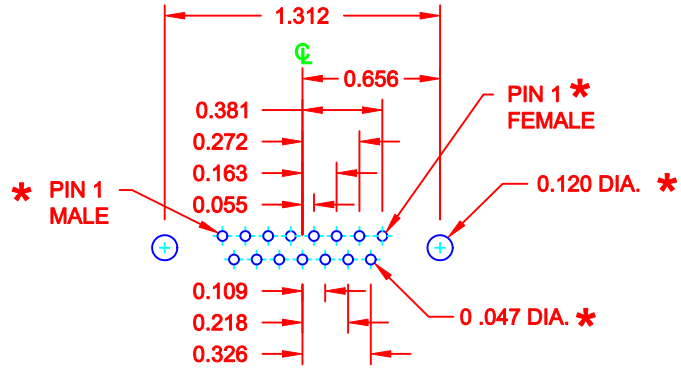

15 POSITION

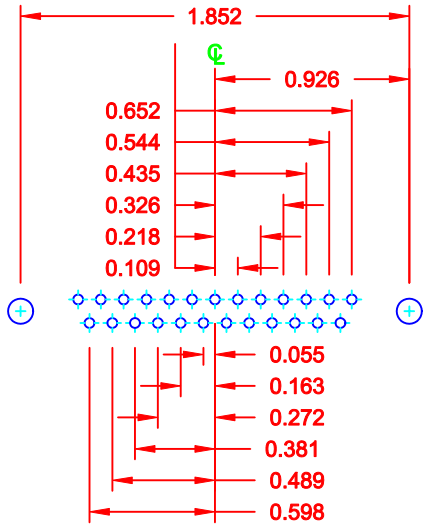

25 POSITION

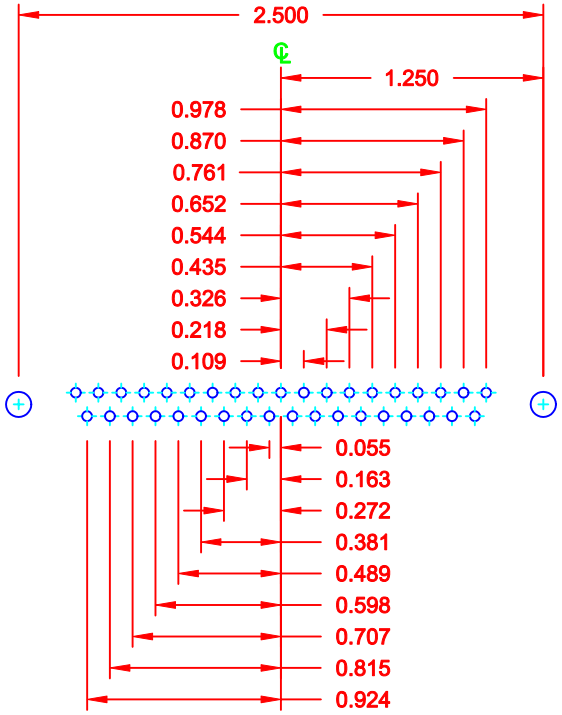

37 POSITION

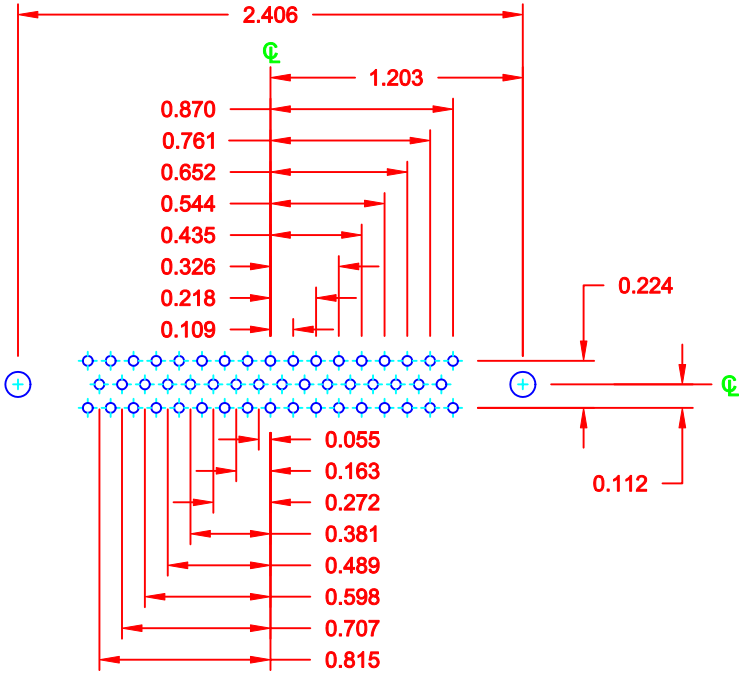

50 POSITION

* TYP. ON ALL SIZES

DO NOT SCALE FROM DRAWING

THESE DRAWINGS AND SPECIFICATIONS ARE THE PROPERTY OF NorComp AND SHALL NOT BE REPRODUCED, COPIED OR USED AS THE BASIS FOR THE MANUFACTURE OF SALE OF APPARATUS WITHOUT WRITTEN PERMISSION.

DRAWN: C. SMITH	DATE: 03-08-06	
CHECKED:	DATE:	
SCALE: FULL	SHEET 2 OF 3	REV 4
DWG NO. 171-YYY-213RYY1		

NorComp

DESCRIPTION: CLINCH NUT HARDWARE

TOLERANCE:
ALL DIMENSIONS ARE ±0.010

ALL CLINCH-NUTS ARE 4-40 INTERNAL THREADS

01X ..... 0.098" (BOARD SIDE) - CN1

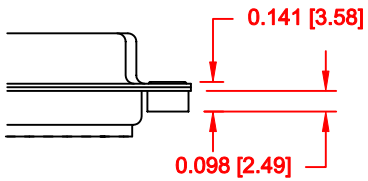

02X ..... 0.236" (BOARD SIDE) - CN2

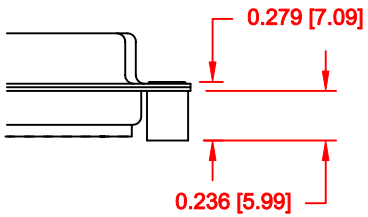

03X..... 0.236" (MATING SIDE) - CN8

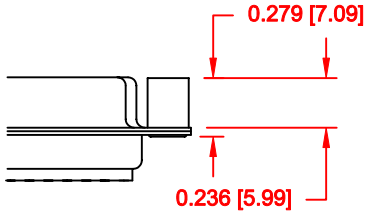

05X ..... 0.237" (BOARD SIDE) - CN10

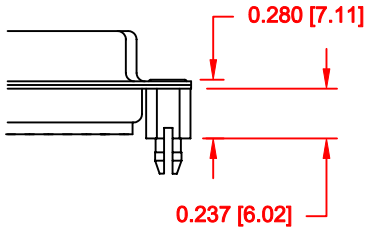

91X ..... 0.237" BOARD SIDE
0.197 MATING SIDE
CN10/SFSO4404

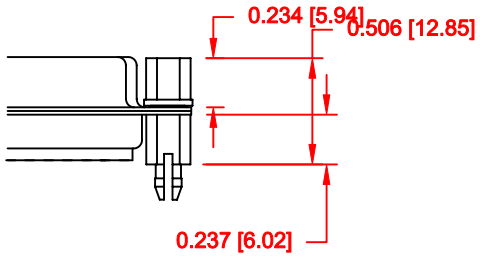

NOTE: 4-40 FEMALE SCREW LOCK IS REMOVABLE

DO NOT SCALE FROM DRAWING

THESE DRAWINGS AND SPECIFICATIONS ARE THE PROPERTY OF NorComp AND SHALL NOT BE REPRODUCED, COPIED OR USED AS THE BASIS FOR THE MANUFACTURE OF SALE OF APPARATUS WITHOUT WRITTEN PERMISSION.

DRAWN: WAYNE ROBBINS	DATE: 11-28-05	
CHECKED:	DATE:	
SCALE:	SHEET 3 OF 3	REV 4
DWG NO. 171-YYY-213RYY1		

NorComp

RoHS COMPLIANT