TDH Series

35 Watt DPAK Package
Thick Film Power Surface Mount

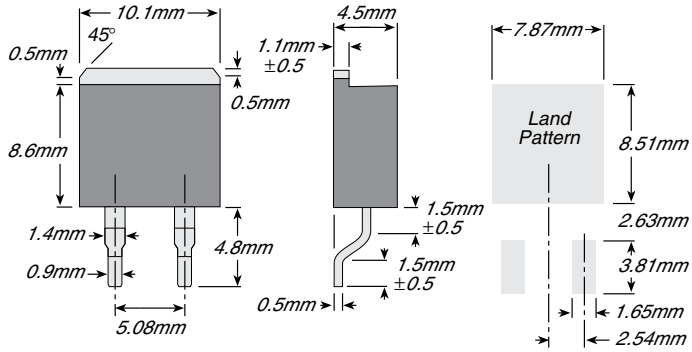

DPAK style power package for surface mounting applications; 35W power rating at 25°C case temperature.

Soldering note: During surface mount soldering the soldering temperature profile must not cause the metal tab of this device to exceed 220°C (260°C for the TDH35H)!

Ohmite's TDH resistor is an economical solution to intermediate power application design requirements. TDH's reliable thick film on alumina substrate construction can be easily heat sinked for higher power performance. TDH resistors are ideal for pulse-loading, pre-charge, bleeder, and snubber applications.

FEATURES

- 35 Watt power rating at 25°C
- SMD - DPAK package configuration
- Heat resistance to cooling plate: R_{th} <4.28°C/W
- A molded case for environmental protection.
- Resistor element is electrically insulated from the metal sink tab.

SPECIFICATIONS

Material

Terminal: Copper

Terminal Plating: Lead Free Solder (97% Tin, 3% Silver)

Electrical

Resistance Range: 0.05Ω to 10KΩ other values on request

Tolerance: ±1% to ±10% (0.5% on request)

Max. Operating Voltage: 350V

Insulation Resistance: 10GΩ min.

Power Rating: Depends upon case temperature. See derating curve.

Working Temperature Range: -55°C to +175°C

Solder Process: The TDH35P cannot exceed 220°C (260°C for the TDH35H) for more than 10 seconds during soldering process.

Derating: 100% @ 25°C to 0% @ 150°C curve referenced to case temperature

Dielectric Strength: 1,800VAC

Operating Temperature Range: -55°C to +150°C

Temperature Coefficient: 10Ω and above, ±50ppm/°C, referenced to 25°C, ΔR taken at +105°C. Between 1 and 10Ω, ±(100ppm+0.002Ω)/°C, referenced to 25°C, ΔR taken at +105°C. For under 10Ω:
0R6 - 9R9 ..... 100PPM
0R4 - 0R59 ... 150PPM
0R2 - 0R39 ... 250PPM
0R1 - 0R19 ... 500PPM
0R05 - 0R09 = 1000PPM

Inductance: less than 20 nanohenries

Flatness: less than 0.1mm tolerance

TEST DATA

Load Life	(MIL–R–39009, 2,000 hours	ΔR ±(1.0% +0.01Ω)
Moisture Resistance	(MIL–Std–202, Method 106)	ΔR =(0.5% +0.01Ω) max.
Short Time Overload	(2 times rated power with applied voltage not to exceed 1.5 times maximum continuous operating voltage for 5 seconds)	ΔR ±(0.3% + 0.01Ω) max.
Thermal Shock	(MIL–Std–202, Method 107, Cond. F)	ΔR =(0.3% + 0.01Ω) max.
Terminal Strength	(MIL–Std–202, Method 211, Cond. A (Pull Test) 2.4N)	ΔR =(0.2% + 0.01Ω) max.
Vibration, High Frequency	(MIL-STD-202, method 211, cond. A (pull test) 2.4N)	ΔR =(0.2% + 0.01Ω) max.

PULSE-FORM

E-function, time between two pulses: 1 sec.

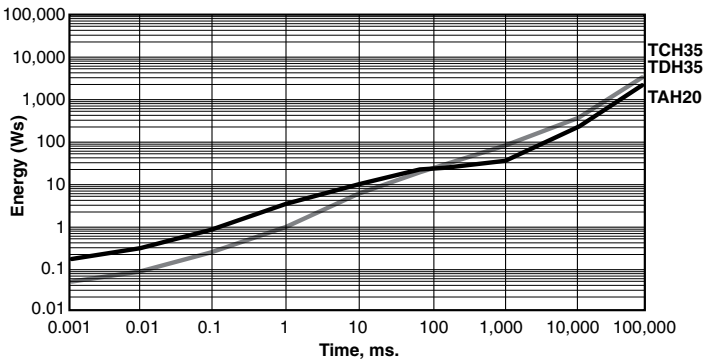

DERATING

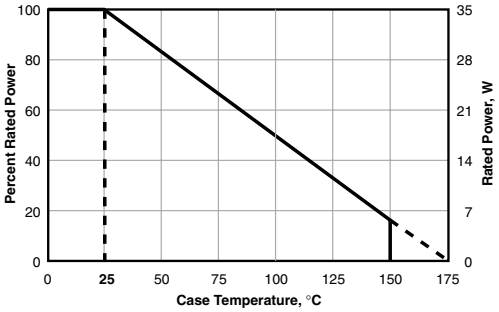

Derating (thermal resistance): 0.23W/°C (4.28°C/W). The case temperature is to be used for purposes of establishing the applied power limit. The case temperature measurement must be made with a thermocouple contacting the center of the component mounted on the designed heat sink. Thermal grease should be applied propperly.

TAPE DIMENSIONS

750 pc./reel

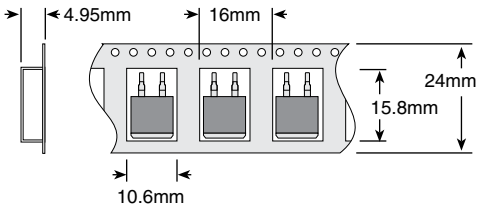

STANDARD PART NUMBERS FOR TDH SERIES

Ohms	Part Number 5% Tolerance	Ohms	Part Number 5% Tolerance
0.10	TDH35PR100JE	25	TDH35P25R0JE
0.15	TDH35PR150JE	33	TDH35P33R0JE
0.20	TDH35PR200JE	39	TDH35P39R0JE
0.25	TDH35PR250JE	47	TDH35P47R0JE
0.30	TDH35PR300JE	68	TDH35P68R0JE
0.36	TDH35PR360JE	75	TDH35P75R0JE
0.47	TDH35PR470JE	100	TDH35P100RJE
0.50	TDH35PR500JE	150	TDH35P150RJE
0.75	TDH35PR750JE	200	TDH35P200RJE
1.0	TDH35P1R00JE	250	TDH35P250RJE
2.0	TDH35P2R00JE	300	TDH35P300RJE
3.0	TDH35P3R00JE	500	TDH35P500RJE
5.0	TDH35P5R00JE	750	TDH35P750RJE
7.5	TDH35P7R50JE	1000	TDH35P1K00JE
10	TDH35P10R0JE	1500	TDH35P1K50JE
15	TDH35P15R0JE	2500	TDH35P2K50JE
20	TDH35P20R0JE	3000	TDH35P3K00JE
		5000	TDH35P5K00JE

ORDERING INFORMATION

T D H 3 5 P R 1 0 0 J E -TR

- **Style**
- **Package Modifier** P = low temp. H = high temp.
- **Ohms** R = Decimal Example: R100 = 0.10, 1R00 = 1.0, 10K0 = 10,000
- **Tolerance** F = 1% J = 5% K = 10%
- **RoHS Compliant** Non-compliant version unavailable
- **Tape and reel** (optional) 750 per reel

Check product availability at **www.ohmite.com**