WWW.PHIHONG.COM

60 Watt Universal 3-Wire Input Adapter
PSAA60M Power Supply meets CEC & EISA Requirements

Features

- Low Cost
- Efficiency Level IV Compliance
- Class B EMI
- Non-vented/Spill-proof Case
- No Load Power Consumption < 0.5W
- Low Profile Design

Applications

- Portable Equipment
- Peripherals
- Networking
- Gaming Machines

Safety Approvals

- cUL / UL EN60950-1
- CE
- TUV EN60950-1
- CB

Mechanical Characteristics

- Length: 130mm (5.12in)
- Width: 60mm (2.36in)
- Height: 32mm (1.30in)
- Weight: 300g (10.58oz)

Output Specifications

Model	DC Output Voltage	Load		Ripple (1) P-P (max.)	Regulation		Efficiency Level
		Min.	Max.		Line	Load	
PSAA60M-120	+12V	0A	5.0A	120mV	±5%		IV
PSAA60M-150	+15V	0A	4.0A	150mV	±5%		IV
PSAA60M-180	+18V	0A	3.3A	180mV	±5%		IV
PSAA60M-240	+24V	0A	2.5A	240mV	±5%		IV

(1) Measured by-pass capacitors 0.1uF / 100uF at output connector terminal and oscilloscope set at 20 Mhz.

Phihong reserves the right to make changes without further notice. Please consult Phihong USA and visit www.phihong.com for the most up-to-date specifications.

PSAA60M Characteristics

WWW.PHIHONG.COM

INPUT:

AC Input Voltage Rating
100 to 240VAC

AC Input Voltage Range
90 to 264VAC

AC Input Frequency
47/63Hz

Input Current
1.6A @ 100VAC
0.8A @ 240VAC

Leakage Current
3.5mA Max. @ 254VAC 60Hz

Inrush Current (cold)
90A Max. @ 100VAC
150A Max. @ 240VAC
(Cold start @ ambient 25°C)

Input Power Saving
< 0.5W at no load

OUTPUT:

Efficiency
85% minimum average efficiency

Hold-up Time
>10mS

Over-voltage Protection
Circuit will latch; re-start after cycling AC power with 2 minutes unplugged

Over-current Protection
Circuit will latch

Short Circuit Protection
Auto-reset when short is removed

ENVIRONMENTAL:

Temperature

Operation	0°C to +40°C
Non-operation	-20°C to +80°C

Humidity

Operation	10% to 90%

Emissions
FCC Class B
EN55022 Class B

Reliability:

MTBF 50k Hr. @ ambient 25°C / output load 4.0A

DC Output Connector
2.1 x 5.5 mm Center Positive
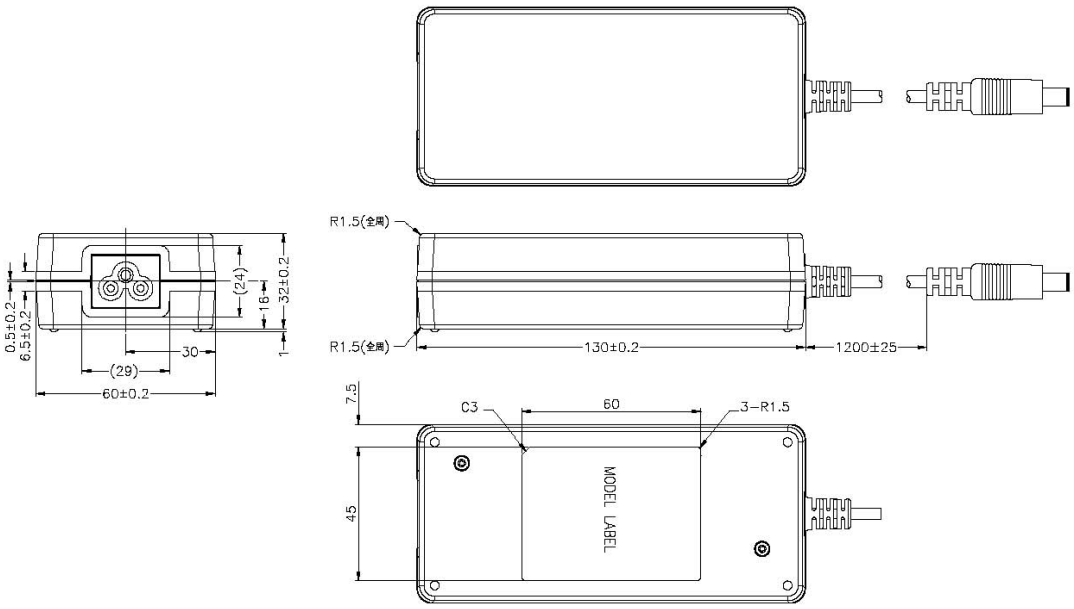
Dimension Diagram Unit: mm