SERPAC 152
Electronics Enclosures

NOTES:
1. WHEN MACHINE OR I PLATES MODIFICATIONS ARE REQUIRED, USE THE CENTER OF THE BOX TO DIMENSION.

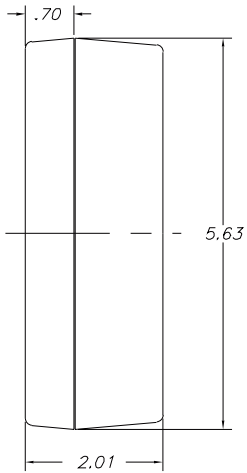

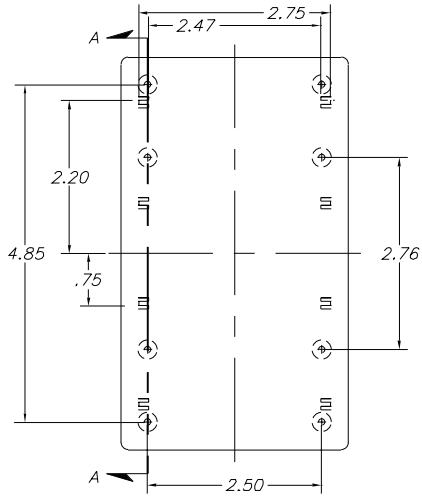

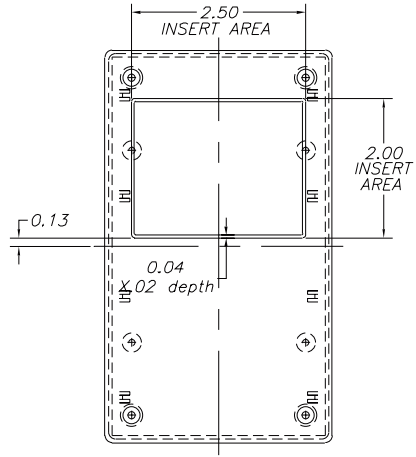

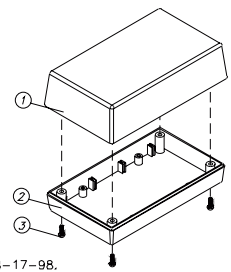

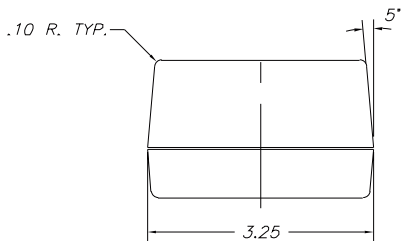

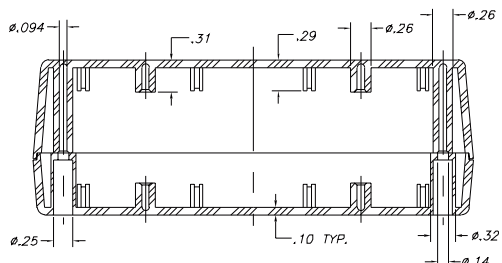

SECTION A–A

8–17–98.

ALL DIMENSIONS ± .010

ITEM	PART NO.	DESCRIPTION
1	52	PLASTIC TOP
2	15	PLASTIC BOTTOM
3	6005	SCREWS (4)

ACCESSORIES	
PART NO.	DESCRIPTION
50	FEET
350	PROTOTYPE GRID BOARD (HORIZ.)
450	PROTOTYPE CLAD BOARD (HORIZ.)
332	PROTOTYPE GRID BOARD (VERT.)
432	PROTOTYPE CLAD BOARD (VERT.)
PS–15	PERIMETER SEAL
PC	POCKET CLIP

619 Commercial Ave. Covina, CA 91723
(626) 331-0517 Fax (626) 331-8584 http://www.serpac.com.