Low Noise, High Voltage EL Lamp Driver IC Demoboard

General Description

The Supertex HV857DB1 demo board contains all necessary circuitry to demonstrate the features of the HV857 EL lamp driver.

Simply connect it to a power supply and a lamp. For additional assistance in designing EL driver circuits, please refer to application notes AN-H33 (effect of external components on performance of Supertex EL drivers) and AN-H43 (EL lamp driver circuits to reduce audible noise).

Specifications	
Input voltage:	1.8V to 5.0V
Typical supply current:	26mA
Lamp size:	2.6in^2
Lamp frequency:	206Hz
Converter frequency:	80kHz

Board Layout and Connection Diagram

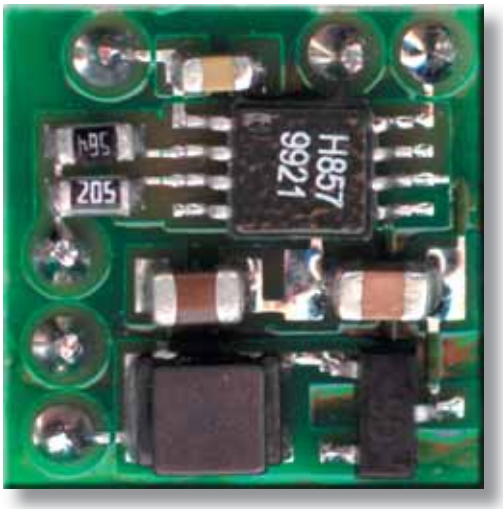

Actual Dimensions: 12mm x 12mm

Connections:

EN Enable Input
Enables/Disables the lamp driver. A logic high (connect to V_{DD}) enables the driver, and a logic low (connect to GND) disables the driver. This input can be connected to a mechanical switch or to a logic circuit output that has a source impedance of less than 20kΩ.

V_{DD} IC Supply
Supplies the HV857 EL driver IC. The supplied circuit is optimized for 3.0V operation. The operating range can be from 1.8V to 5.0V. Connect to positive terminal of a power supply.

V_{IN} Inductor Supply
Supplies the high voltage power converter. Connect to positive terminal of a power supply.

GND Circuit Ground
Connect to V_{DD} and V_{IN} negative terminals. Supply bypass capacitor for both V_{DD} and V_{IN} are provided on the demo board. External supply bypass capacitors are not required.

V_A and V_B Lamp Connections
Connect to an EL lamp. Polarity is irrelevant.

Note:
Make sure all the above connections are made before powering up the supply voltages.

HV857DB1 Schematic

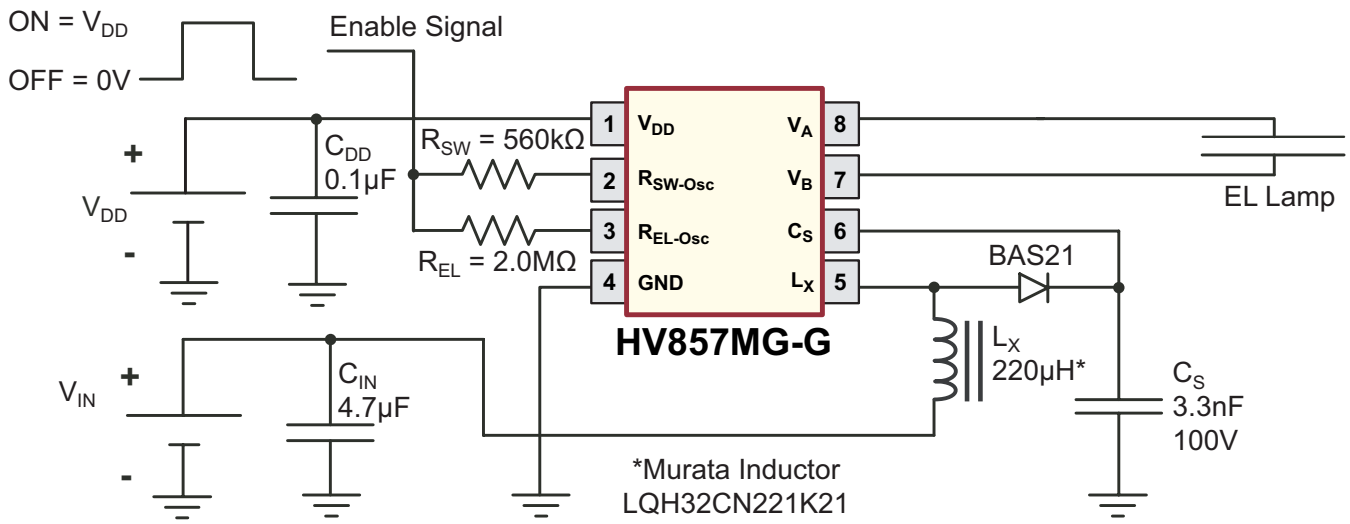

Note:
Tie V_{DD} and V_{IN} together if split supplies are not used.

Typical Performance *(when driving a 2.6in² green lamp)*

$V_{DD} = V_{IN}$ (V)	I_{IN} (mA)	V_{CS} (V)	f_{EL} (Hz)	Brightness	
				ft-lm	cd/m²
1.8	24.6	76.4	206	3.65	12.5
2.0	25.2	82.8	206	4.24	14.5
3.0	23.6	86.4	206	5.41	18.5
4.0	19.2	88.0	206	5.88	20.1
5.0	15.4	90.0	206	6.23	21.3

Typical Performance *(when driving a 1.8in² green lamp)*

$V_{DD} = V_{IN}$ (V)	I_{IN} (mA)	V_{CS} (V)	f_{EL} (Hz)	Brightness	
				ft-lm	cd/m²
1.8	20.8	84.0	206	4.56	15.6
2.0	17.3	84.8	206	4.91	16.8
3.0	13.9	86.8	206	5.53	18.9
4.0	9.6	88.0	206	5.94	20.3
5.0	7.2	90.0	206	6.20	21.2

HV857DB1 Bill of Materials

Component	Description	Package	Manufacturer	Part #
L_X	220µH Inductor	-	Murata	LQH32CN221K21
C_S	3.3nF, 100V, NPO chip capacitor	0805	Novacap	0805N332K101NT
R_{SW}	5%, 560kΩ resistor	0805	Any	---
R_{EL}	5%, 2MΩ resistor	0805	Any	---
C_{IN}	4.7µF, 10V ceramic chip capacitor	0805	Any	---
C_{DD}	0.1µF, 16V ceramic chip capacitor	0603	Any	---
Diode	250V fast recovery diode	SOT-23	Diodes Inc	BAS21
Clip	Micro alligator clip	-	Mueller	BU-34
Boot	Flexible vinly insulation	-	Mueller	BU-36-0
U1	EL driver IC	MSOP-8	Supertex Inc	HV857MG-G

Supertex inc.
1235 Bordeaux Drive, Sunnyvale, CA 94089
TEL: (408) 222-8888 / FAX: (408) 222-4895
www.supertex.com